SUNSHINE ELECTRONICS TRADING LIMITED

SEL-2835-YP-3V350

Features

Emiting Color: White

Lens Type: Yellow Diffused

Device Outline: 3.5x2.8x0.8 mm

HBM ESD: Class 2

Pb-Free

RoHS compliant: RoHS

Application

Backlight of Mobile, Machine Vision. LCD Display, Indoor Lighting

-

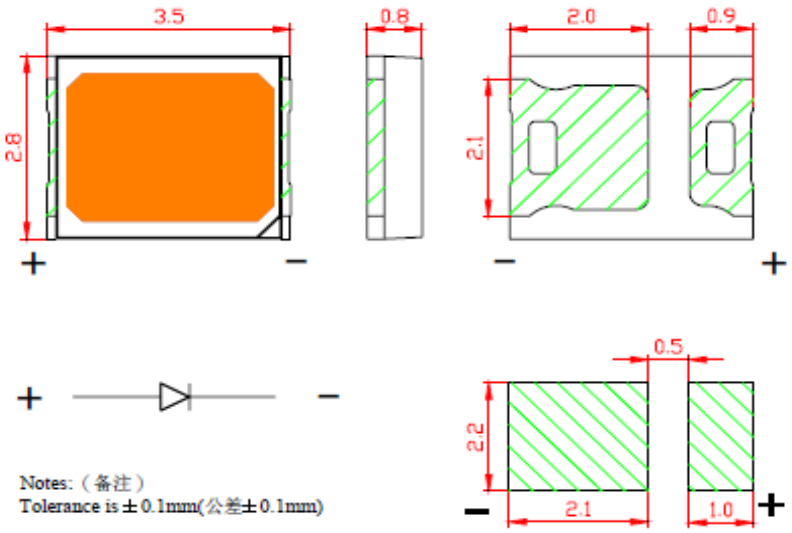

Notes:（备注）
Tolerance is ± 0.1mm(公差± 0.1mm)

SPECIFICATION

MODEL				
Absolute Maximum Ratings	Power Dissipation (Pd), mW		1000	
	Forward Current (Ifm), mA		350	
	Pulse Forward Current (If), mA		500	
	Reverse Voltage, (VR), IR = 350 mA		>7	
	Operating Temperature (Topr), °C		up -40 to +85	
	Storage Temperature (Tstg), °C		up -40 to +100	
Electro-Optical Characteristics	Forward Voltage (IF=350mA), V		Min.	-
			Typ.	3,2
			Max.	3,6
	Reverse Voltage (Vr=7V), mA		Min.	-
			Max.	30
	Half Intensity Angle (IF=350mA), deg.		120	
	Junction Temperature (Tj), ℃		115	
	Thermal Resistance Rthj-s IF =350mA, ℃/w		30	
Color, Luminous flux and CRI	Emitted color		white	
	Chromaticity Coordinates	CIE-X IF = 350mA	0,368-0,410	
		CIE-Y IF = 350mA	0,304-0,346	
	CRI (Typ.)		80	
	Luminous flux (IF=350mA), lm		Min.	-
			Typ.	118
			Max.	-

Product Ranks

亮度分档标准		电压分档标准	
光通量Φ(Lm) IF=350mA	代表符号	正向电压VF值(V) IF=350mA	代表符号
100-110	L100	2.80--2.90	N
110-120	L110	2.90--3.00	P
120-130	L120	3.00—3.10	Q
		3.10—3.20	R
		3.20—3.30	S
		3.30—3.40	T
		3.40—3.50	U
		3.50—3.60	V

Notes/备注：Rank error/分档误差： VF：±0.10V，Φ：±15%

色坐标分档：

色坐标误差：±0.005

代码	轴	参数			
PC	X	0.375	0.368	0.396	0.403
	Y	0.311	0.318	0.346	0.339
PD	X	0.382	0.375	0.403	0.410
	Y	0.304	0.311	0.339	0.332

Diagram

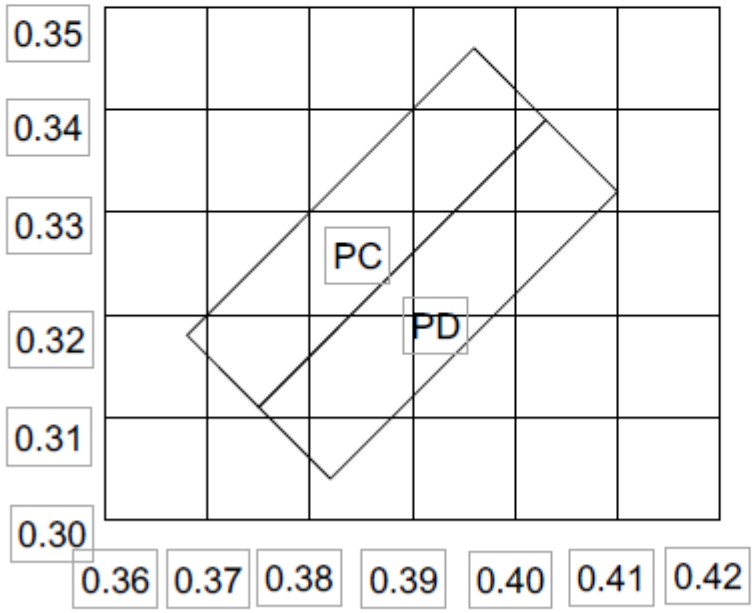

Typical electrical/optical characteristic curves/光电特性曲线：

Fig.1 正向电流 Vs. 正向电压

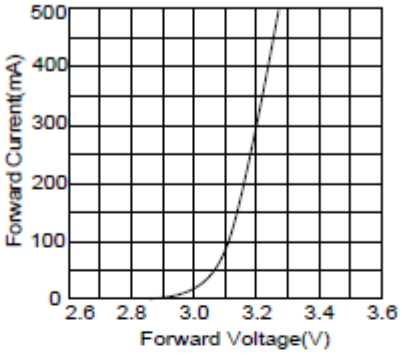

Fig.2 相对亮度 Vs. 正向电流

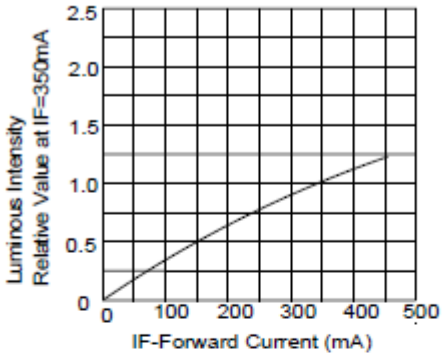

Fig.3 正向电流 Vs. 环境温度

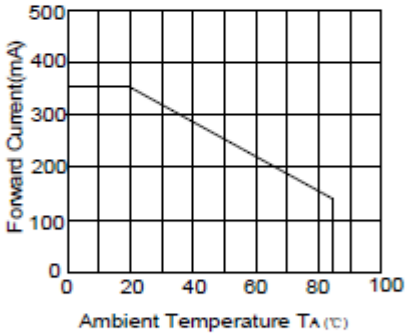

Fig.4 相对亮度 Vs. 环境温度

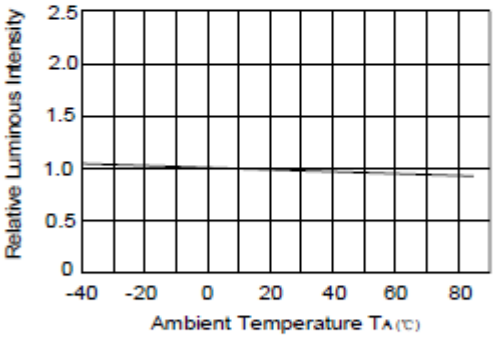

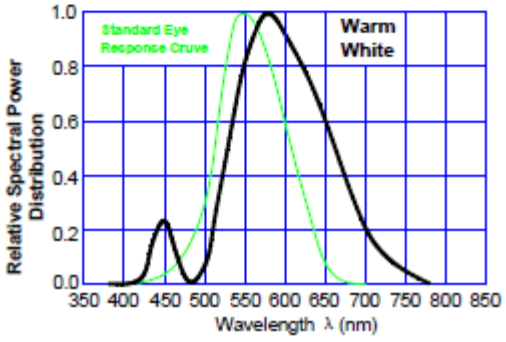

SPATIAL DISTRIBUTION

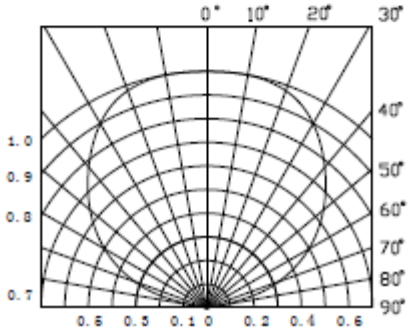

Relibility Analysis/可靠性试验

Test Items And Results/测试项目和判据

No.	Item/项目	Test Condition/测试条件	Spec. / 引用标准	Q'ty/数量	Time/时间	Standard/判定
1	IR Reflow (Reflow Soldering) 回流焊接	Tsld=220℃，10sec	GB/T 4937，Ⅱ，2.2	20	2times	ALL PASS
2	Solder ability 可焊性	Tsld=235±5℃，3sec	GB/T 4937，Ⅱ，2.1	20	1times Over 95%	ALL PASS
3	Temperature Cycle 高低温循环	-40℃——100℃ 30min ~ 30min The cut is not more than 1 min	GB/T 4937，Ⅲ，1	20	50cycles	ALL PASS
4	Moisture Resistance Cyclic 湿热循环	25℃/12hr~ 55℃/12hr 95%RH	GB/T 4937，Ⅲ，4	20	6cycles	ALL PASS
5	High Temperature Storage 高温储存	Ta=100℃	GB/T 4937，Ⅲ，2	20	1000hrs	ALL PASS
6	Low Temperature Storage 低温储存	Ta=-40℃	GB/T 4937，Ⅲ，2	20	1000hrs	ALL PASS
7	Steady State perating Life 电耐久性	IF=350mA Ta=25℃	GB/T 18904.3 Part A	20	1000hrs	ALL PASS

Criteria For Judging Damage/判断标准

Item/项目	Symbol/符号	Test conditions /测试条件	Criteria for Judgement /判断标准	
			Min./最小值	Max./最大值
Luminous Intensity/亮度	Iv	IF=350mA	L.S.L *0.7	/
Forward Voltage/正向电压	VF	IF=350mA	/	U.S.L*1.1
Reverse current/反向电流	IR	VR=7v	/	U.S.L*2

*U.S.L.: Upper Standard Level / 上限
*L.S.L.: Lower Standard Level / 下限

Specification of Packing /包装规格

Taping and Orientation/编带和方向

Quantity/数量：3000units/reel

Diameter/直径：178 mm

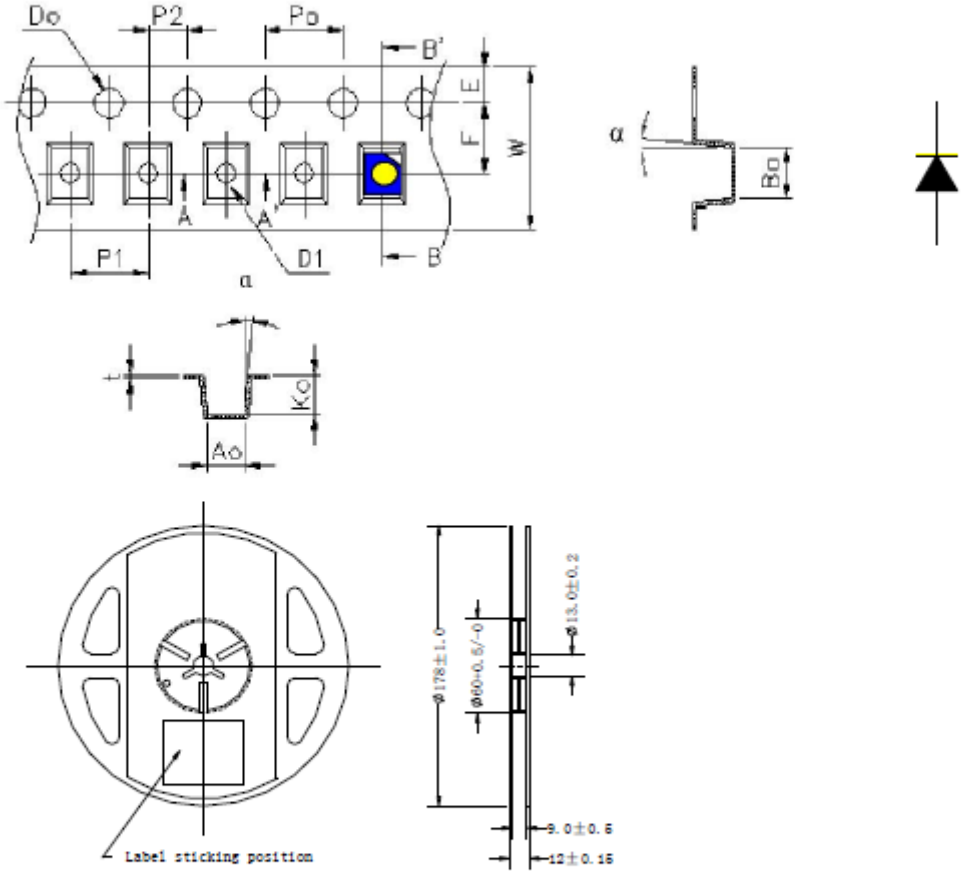

Item/项目	Spec/数值	Tol.(+/-)/误差	Item/项目	Spec/数值	Tol.(+/-)/误差
W	8.00	±0.10	P2	2.00	±0.05
E	1.75	±0.10	T	0.20	±0.02
F	3.50	±0.010	A0	3.00	±0.10
D0	1.55	±0.05	B0	3.75	±0.10
D1	1.10	±0.1	K0	1.25	±0.10
P0	4.00	±0.1	α	Max 5°	