NEO500

High Current LED Driver

General Description

NEO500 is a low dropout current regulator for high current LED Driver. The output current was decided by external resistor. Build-in thermal shutdown and current limit protection function.

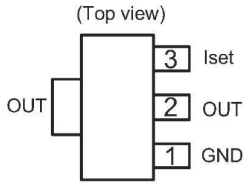

SOT-89-3L

Features

- 500mA Maximum Output Current
- 2% Output Current Setting Accuracy
- External Resistor Allows Designer to set Current
- Output current limiting - Built-in thermal shutdown
- High Power LED Driver
- Packages: SOT89-3L

Pin assignment

The package of NEO500 is SOT89-3L; the pin assignment is given by:

Name	Description
GND	Ground
Iset	Output current set input. Connect a resistor from I_{SET} to GND to set LED current.
OUT	Output pin. The LEDs are connected from these pins to VCC.

Ordering Information

Order Information	Top Marking
NEO500 X X X Pin Define: Blank:NEO500 Package: F:SOT89-3L Packing: Blank :Bag, A : Taping	N500 → Part number L Y W Output Type: F: NEO500 WW: 01~26(A~Z), 27~52(a~z) Year: 3=2013, 4=2014, 5=2015

Absolute Maximum Ratings

Characteristics	Symbol	Rating	Unit
Output Voltage	V_{OUT}	28	V
Operating Junction Temperature Range	T_{OP}	-40 to +125	°C
Maximum junction Temperature (Thermal Shutdown)	T_J	150	°C
Power Dissipation (PCB=FR4, 2 inch sq.) T_A=25°C, T_J=125°C (SOT89)	P_D	1110	mW
Storage Temperature	T_{ST}	-65 to +150	°C

Electrical Characteristics

(Under Operating Conditions, T_J=25°C)

Characteristics	Conditions		Min	Typ	Max	Units
Output Voltage	I_{OUT} = 5mA		2.45	-	26	V
Output Sink Current	V_{CC} — V_{LED} = V_{OUT} > 2.5V, I_{OUT} = 5mA		500			mA
V_{SET} Voltage	V_{CC} — V_{LED} = V_{OUT} > 2.5V, I_{OUT} = 5mA		1.225	1.250	1.275	V
Dropout Voltage (V_{OUT} -V_{SET})	I_{OUT} = 500mA, ΔV_{SET}=2%V_{SET}		-	1.1	1.2	V
Output Current (Note 1,2)	1W LED	R_{SET}=3.6Ω/0.5 W	340	347	354	mA
	0.5W LED	R_{SET}=7.2Ω	170	174	177	mA
	20mA LED	R_{SET}=60Ω	0.4	20.8	21.3	mA
Current Limit	V_{OUT}> 5V		0.8	-	-	A
θ_{JA} Thermal Resistance Junction-to-Ambient	SOT89		-	300	-	°C/W
θ_{JC} Thermal Resistance Junction-to-Case	SOT89(PCB=FR4, 2 inch sq.)		-	90	-	°C/W

Application Circuit

- **AC Input**

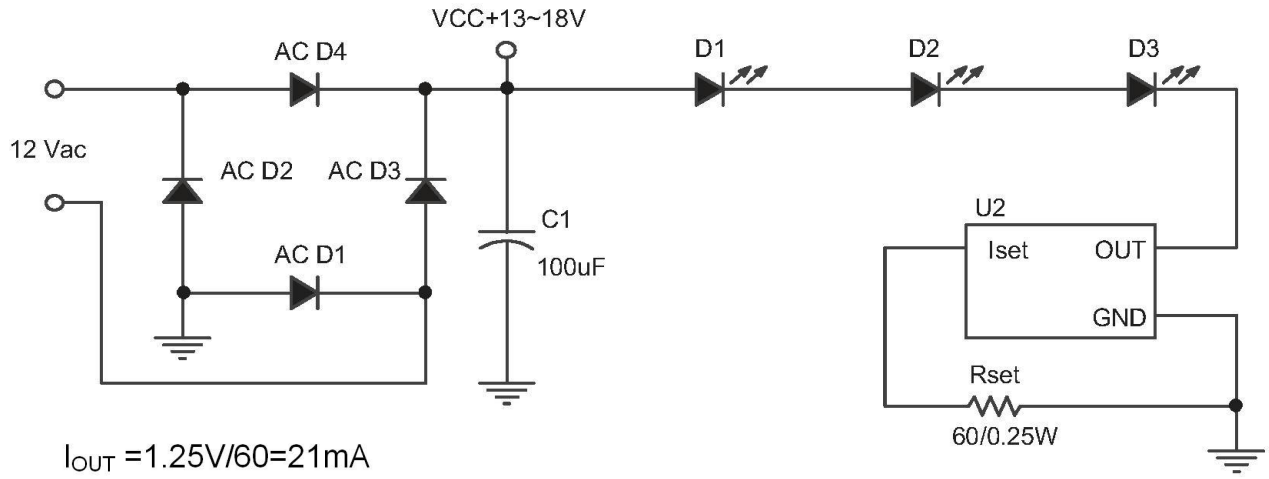

I_{OUT} =1.25V/60=21mA
V_{OUT} ≥2.5V
1. 13V- V_{LED}-V_{SET} =1.25V
   IC's PD= (1.25*0.02=0.03W)
2. 18V- V_{LED}-V_{SET}=6.25V
   IC's PD = (6.25*0.02=0.13W)
V_{LED}=10.5V (3.5V*3LED)

- **DC Input**

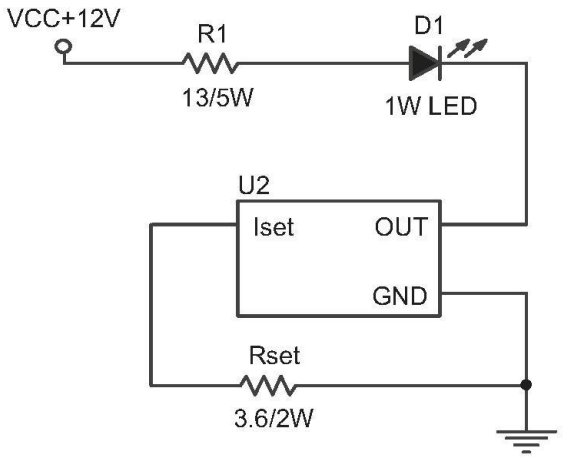

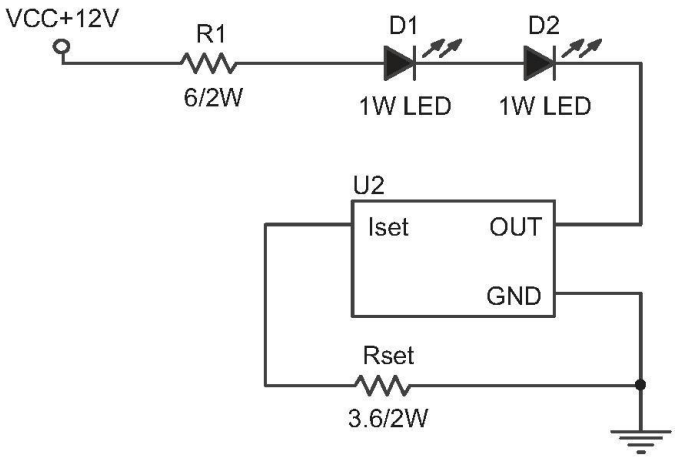

I_{OUT}=1.25V/3.6=347mA
V_{OUT}=2.5V
1. R1=13, VR1=4.51V
R1 PD=4.51*0.347=1.57W
2. 12V- VR1- V_{LED}-V_{SET}=2.74V
IC PD = (2.74*0.347=0.95W)
V_{LED}=3.5V

I_{OUT}=1.25V/3.6=347mA
V_{OUT}=2.5V
1. R1=6, VR1=2.08V
R1 PD=2.08*0.347=0.73W
2. 12V- VR1- V_{LED}-V_{SET}=1.67V
IC PD=1.67*0.347=0.58W
V_{LED}=7V

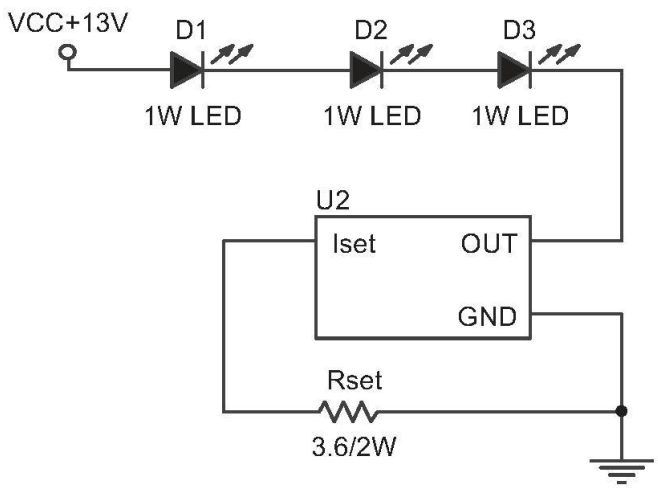

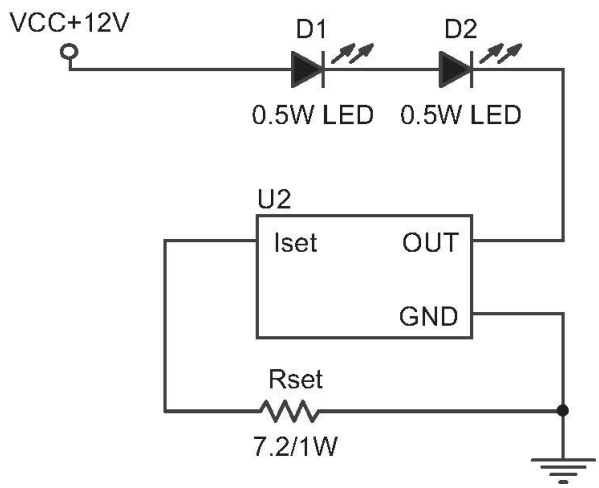

I_{OUT}=1.25V/3.6=347mA
V_{OUT}=2.5V
13V- V_{LED}-V_{SET}=2.02V
IC PD = 1.25*0.347=0.4W)
V_{LED}=10.5V (3.5V*3LED)

I_{OUT}=1.25V/7.2=174mA
V_{OUT}=2.5V
12V- V_{LED}-V_{SET}=3.75V
IC PD=3.75*0.174=0.65W
V_{LED}=7V

Typical Operating Characteristics

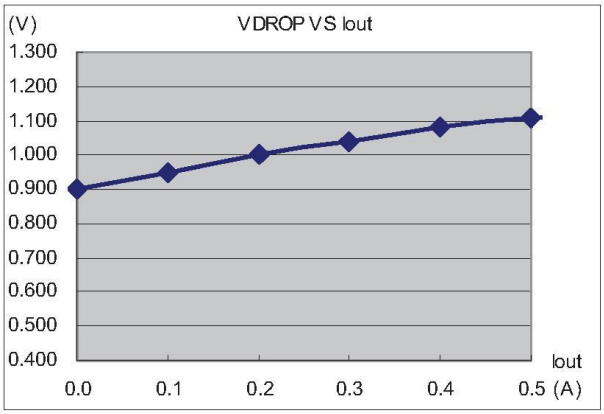

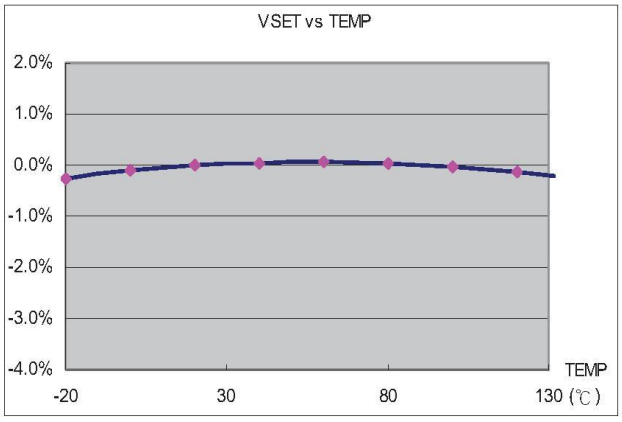

Physical Dimensions

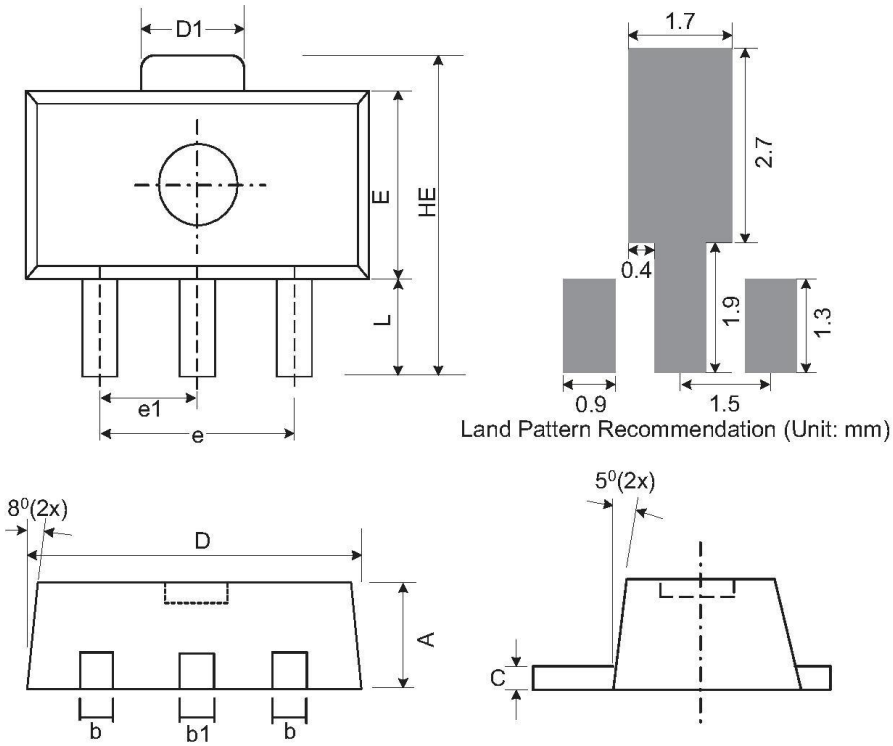

Symbol	Dimensions in Millimeters			Dimensions in Inches		
	Min.	Nom.	Max.	Min.	Nom.	Max.
A	1.40	1.50	1.60	0.055	0.059	0.063
b	0.36	0.42	0.48	0.014	0.017	0.019
b1	0.44	0.50	0.56	0.017	0.02	0.022
C	0.35	0.40	0.44	0.014	0.016	0.017
D	4.40	4.50	4.60	0.173	0.177	0.181
D1	1.35	1.59	1.83	0.053	0.063	0.072
e	3.0 BSC			0.118 BSC		
e1	1.5 BSC			0.059 BSC		
E	2.29	2.45	2.60	0.09	0.097	0.102
HE	3.94	4.10	4.25	0.155	0.161	0.167
L	0.80	1.00	1.20	0.031	0.04	0.047